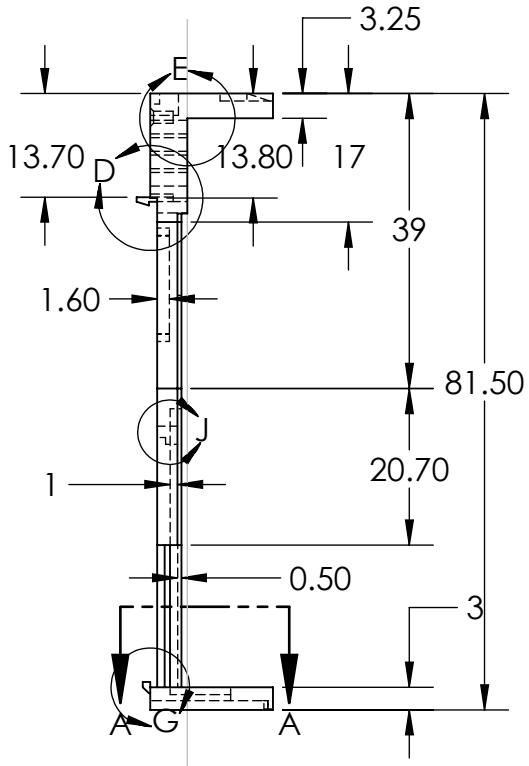

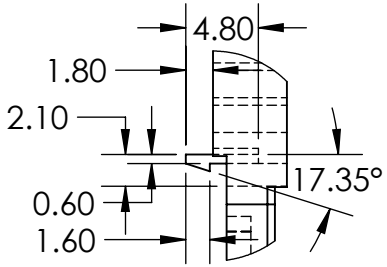

DETAIL D
SCALE 2 : 1

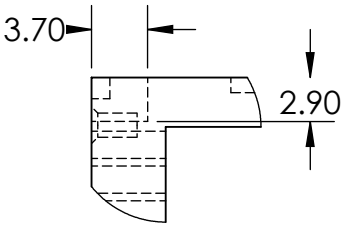

DETAIL E
SCALE 2 : 1

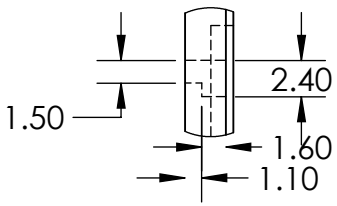

DETAIL J
SCALE 2 : 1

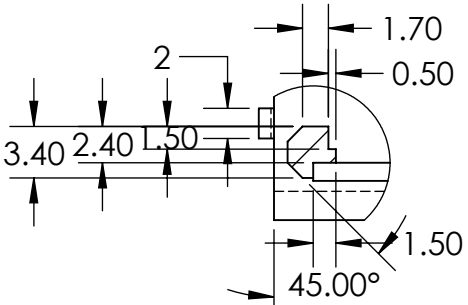

DETAIL F
SCALE 2 : 1

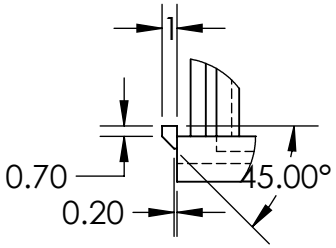

DETAIL G
SCALE 2 : 1

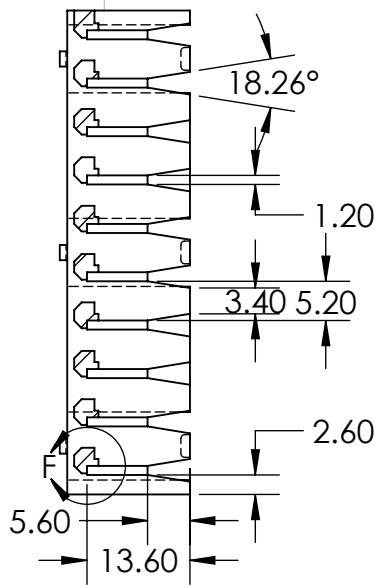

SECTION A-A

UNLESS OTHERWISE SPECIFIED: DIMENSIONS ARE IN MILLIMETERS SURFACE FINISH: TOLERANCES: LINEAR: ANGULAR:	FINISH:			DEBURR AND BREAK SHARP EDGES	DO NOT SCALE DRAWING	REVISION
					PCON TECHNOLOGY SYSTEMS	
	NAME	SIGNATURE	DATE		TITLE:	
DRAWN						
CHK'D						
APPV'D						
MFG						
Q.A				MATERIAL:	DWG NO. base 10 cell_2	A4
				WEIGHT:	SCALE:1:1	SHEET 1 OF 1